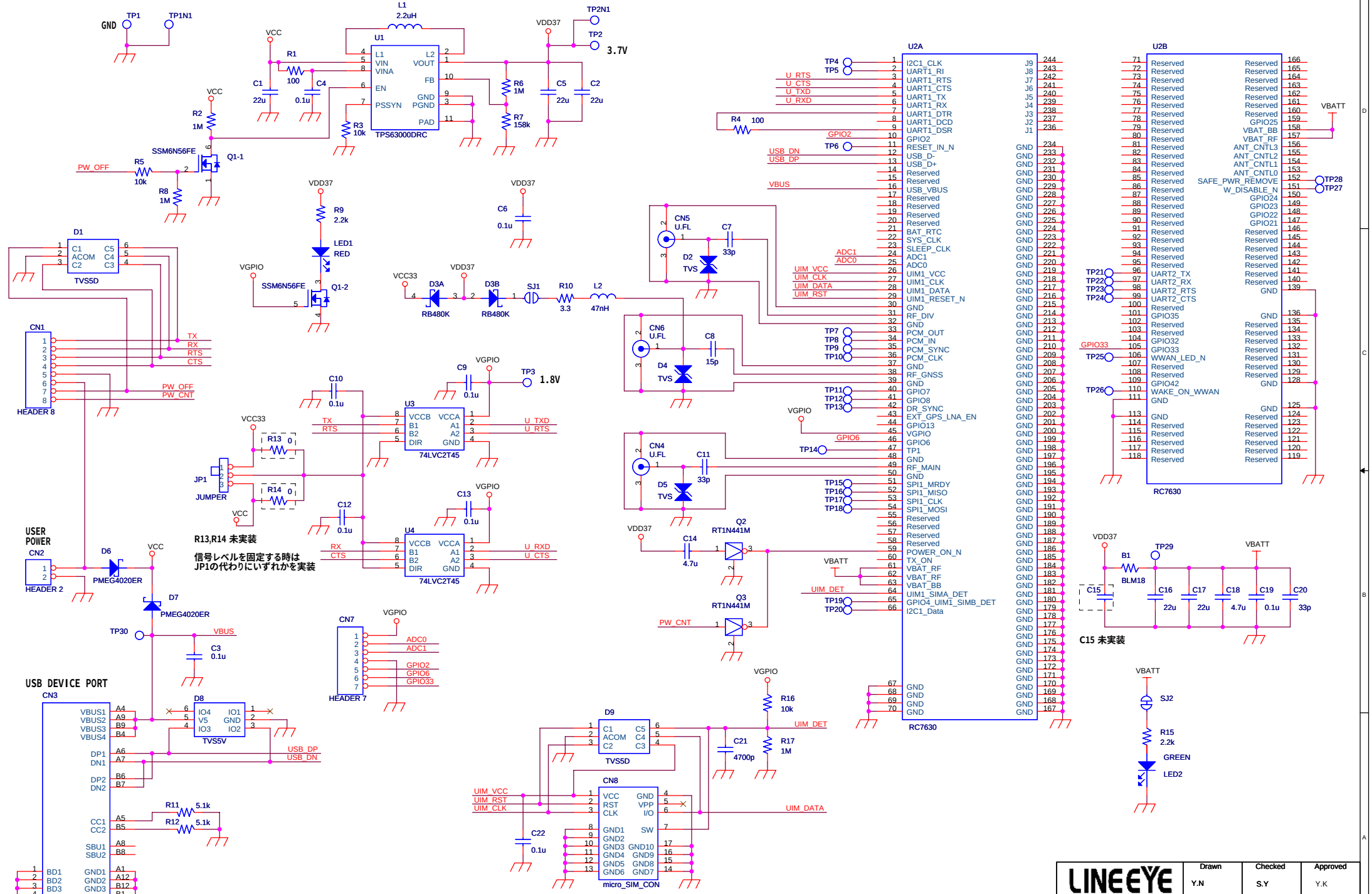

LINEEYE	Drawn	Checked	Approved
	Y.N	S.Y	Y.K

Title: RC7630組込み評価ボード EB-RC7630

Size	Document Number	Rev
A3	EB2-M01-01	1

Date: Thursday, November 25, 2021 Sheet 1 of 1